MERCRUISER (496 MAG (Base Model))
Serial Nbr Range: 0W650000 _Up ()

Block, Crankshaft, Oil Pump and Front Cover

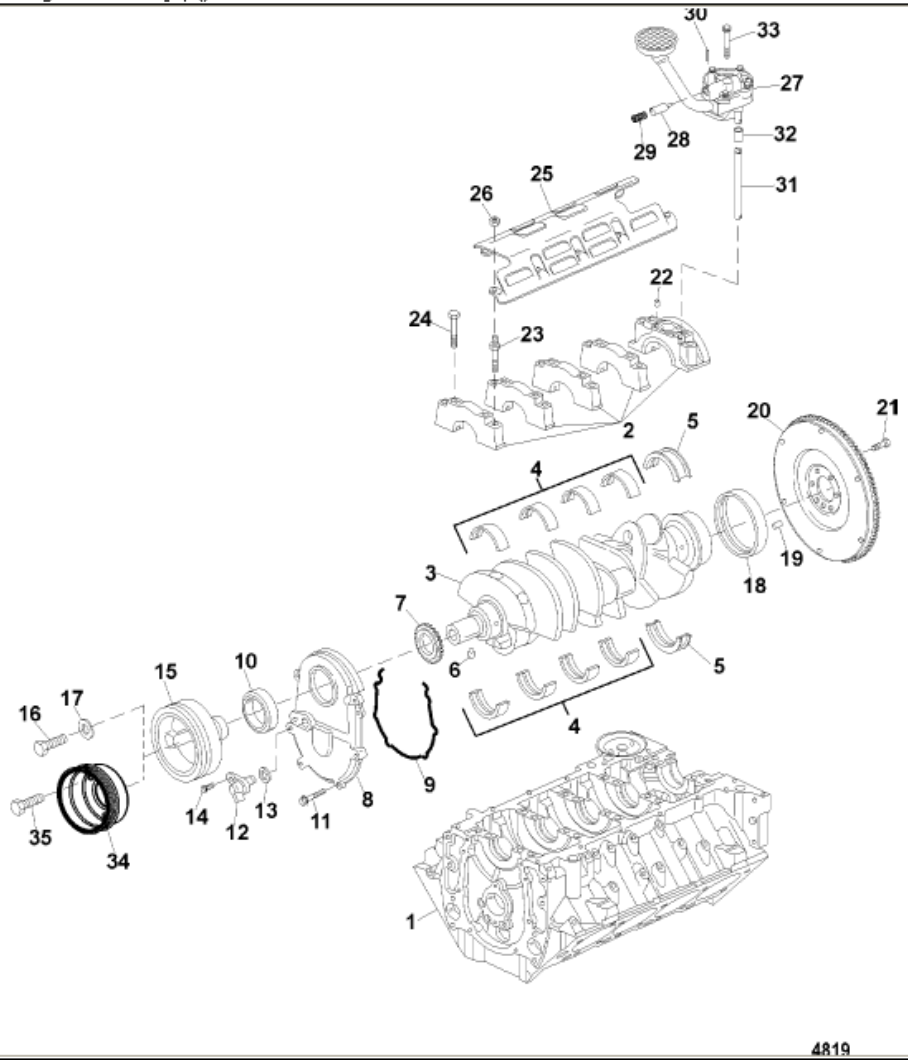

Parts List

Ref	Class	Part	Description	Qty	Comment	Footnote
NS		865752A01	LONGBLOCK, Base	1		
NS		865754A01	LONGBLOCK, High Output	1		
1		NSS	NOT SOLD SEPARATE, Block, En	1	(Order Longblock Assembly)	
2		NSS	NOT SOLD SEPARATE, Cap, Cr	5		4,5
3	429	881654001	CRANKSHAFT	1		4,5
4	23	884702	BEARING KIT	4		4,5
5	23	881607	BEARING KIT, Crankshaft Main Th	1		4,5
6	17	881605	PIN, Balancer Locating	1		4,5
7	43	881655	SPROCKET, Crankshaft	1		4,5
8		892616001	COVER, Front	1		4,5
9	27	881604	GASKET, Front Cover	1		2,4,5
10	26	881613001	SEAL, Front Crankshaft	1		2,4,5
11	10	881577001	SCREW, (M6 x 30)	6		4,5
12		892615001	SENSOR, Camshaft Position	1		4,5
13		NSS	NOT SOLD SEPARATE, Seal, Ca	1		4,5
14	10	881594	SCREW, (M6 x 20)	1		4,5
15		891769	BALANCER, Crankshaft	1		
16	10	881587	SCREW, (M16 x 1.5)	1		4,5
17	12	881614	WASHER	1		4,5
18	26	881608001	SEAL, Rear Crankshaft	1		3,4,5
19	17	881609	PIN, Flywheel Locating	2		4,5
20	222	881640T01	FLYWHEEL	1	(Base and High Output)	4,5
21	10	881578	BOLT	6		4,5
22	17	843378	PIN, Dowel, Oil Pump Locating	1		4,5
23	16	881615	STUD, Crankshaft Bearing Cap	10		4,5
24	10	881580	SCREW, (M12 x 89)	10		4,5
25		883236	DEFLECTOR, Oil	1		4,5
26	11	881579	NUT	9		4,5
27		881652	PUMP, With Screen, Oil	1		4,5
28	17	881611	PIN, Oil Pump	1		4,5
29	24	881610	SPRING, Oil Pump	1		4,5
30	22	881643	VALVE, Pressure Relief	1		4,5
31		14761	SHAFT AND RETAINER, Oil Pump	1		4,5
32	23	36183	RETAINER, Oil Pump Drive	1		4,5
33	10	881585	SCREW, (M10 x 60)	1		4,5
34		862349	PULLEY, Crankshaft	1		4,5
35	10	40090 25	SCREW, (M10 x 25)	3		4,5